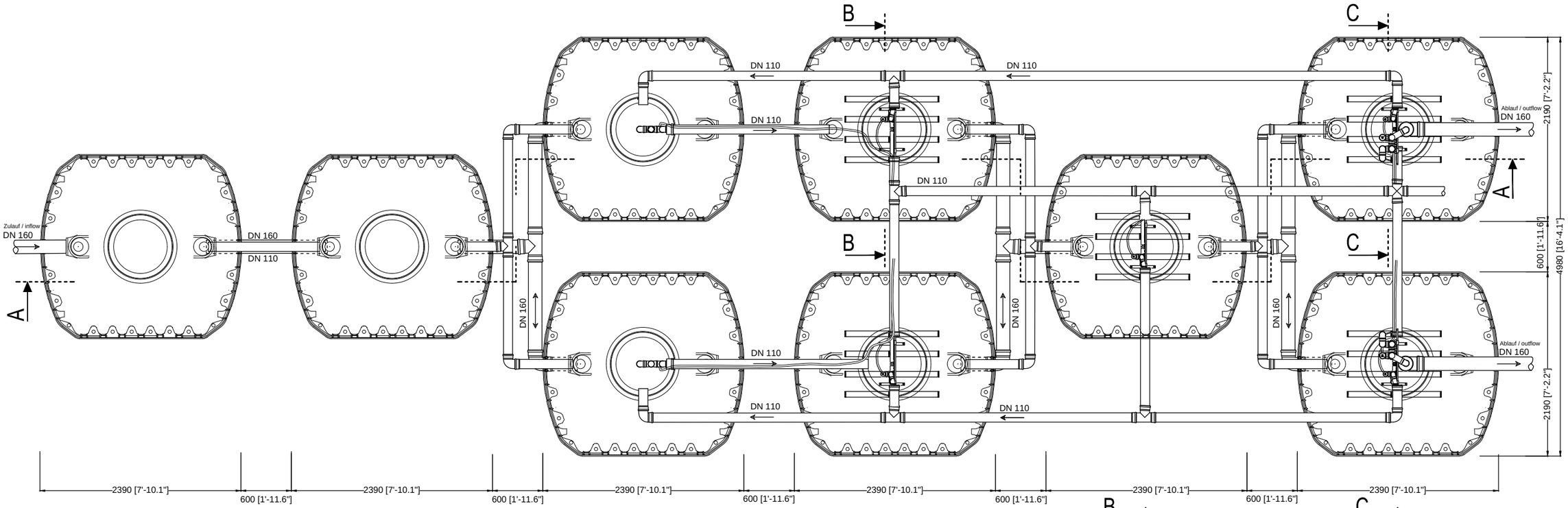


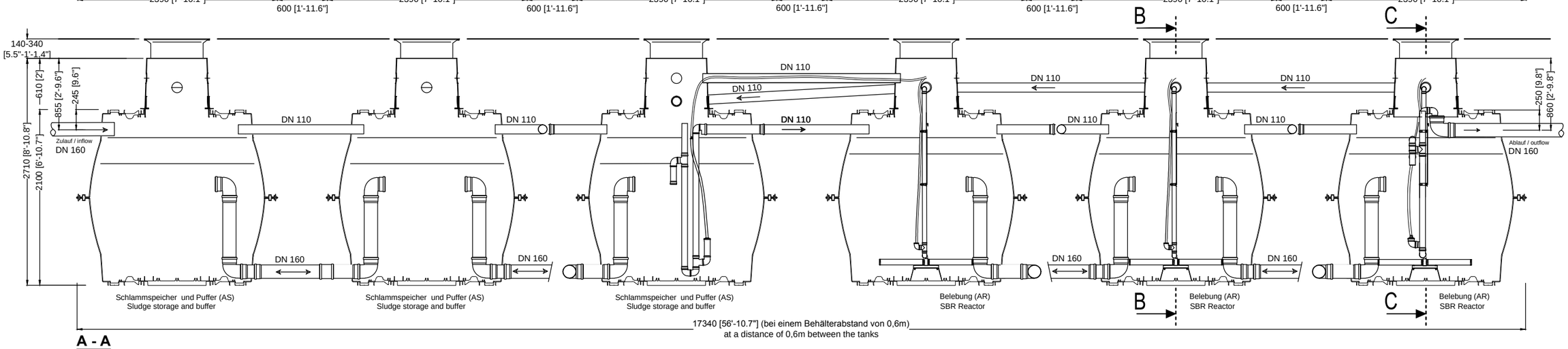


**A - A**

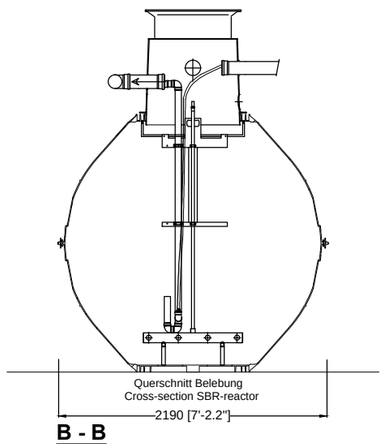


**B - B**

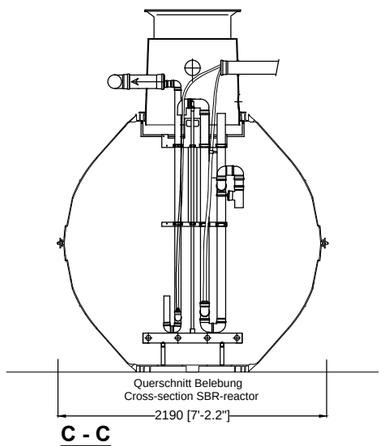


**C - C**

| | | | |
|---|---|---|---|
| D<br>Klaro Easy 150 EW Tankdom - Maxi<br>9 x Carat 6500 L / 9 x 1717,1 gal. | | | Artikel-Nr.<br>product no.<br>article no.<br>articulo no. 107402 |
| GB<br>Klaro Easy 150 inh. TD-Maxi<br>9 x Carat 6500 L / 9 x 1717,1 gal. | ES<br>Klaro Easy 150 PE Cúpula Maxi<br>9 x Carat 6500 L / 9 x 1717,1 gal. | FR<br>Klaro Easy 150 EH Maxi-dôme<br>9 x Carat 6500 L / 9 x 1717,1 gal. | revision |
| gezeichnet / drawn: ISC | Gewicht / weight: 9 x 265 kg | Otto Graf GmbH<br>Carl-Zeiss-Str. 2-6<br>DE-79331 Teningen<br>mail@graf.info<br>www.graf.info | |
| Datum / date: 2017.01.04 | Toleranz / tolerance: +/- 3% | | |
| Maßstab / scale: 1:50 | Einheiten / units: mm [inch]<br>gal. = US gal. | | |

DIN A3