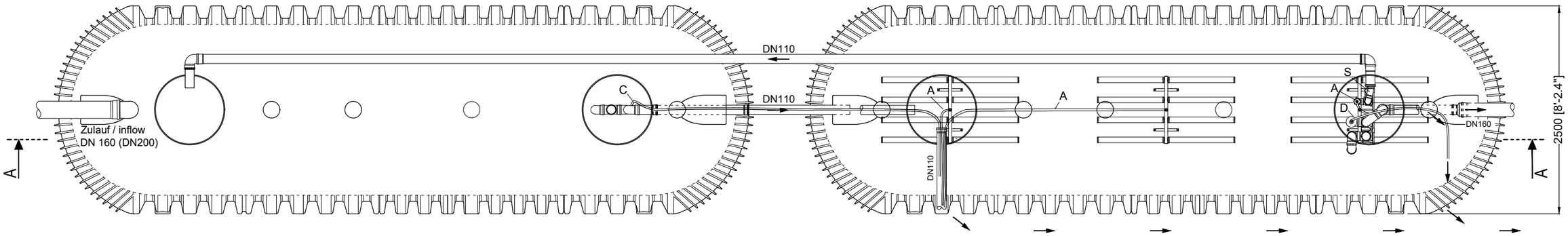

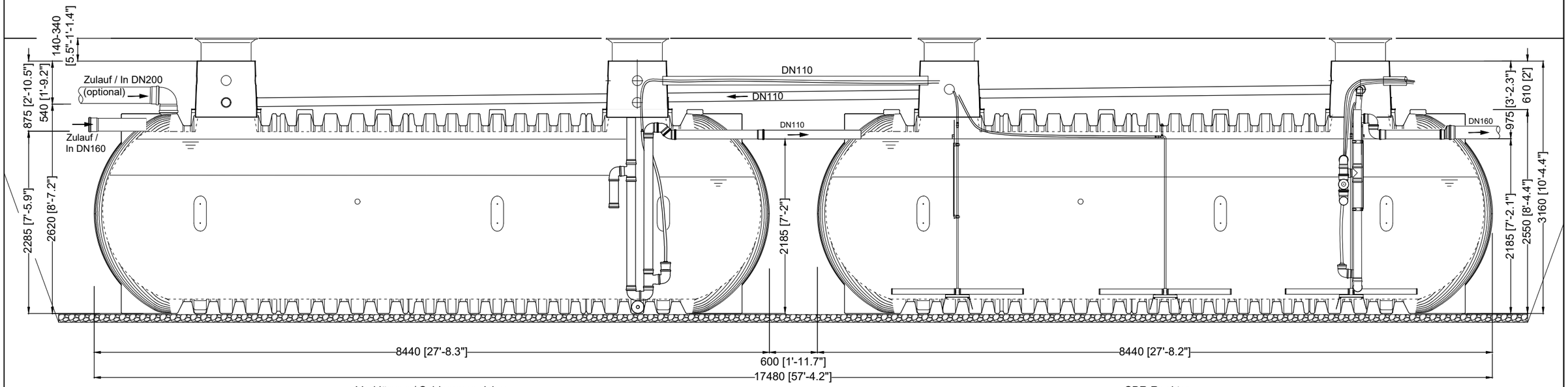

A - A

Luftschläuche, Compressed air, Tuyaux de pression, Mangueras de presión, Tubi di aria compressa					
A	Belüftung	25mm Ø (blau)	D	Klarwasserabzug	25mm Ø (schwarz)
	Aeration	25mm Ø (blue)		Discharging lifter	25mm Ø (black)
	Aération	25mm Ø (bleu)		Évacuation des eaux traitées	25mm Ø (noir)
	Ventilación	25mm Ø (azul)		Drenaje de agua clara	25mm Ø (negro)
	Ventilazione	25mm Ø (blu)		Scarico di acqua chiara	25mm Ø (nero)
C	Beschickungsheber	25mm Ø (rot)	S	Schlammrückführung	25mm Ø (weiß)
	Charging lifter	25mm Ø (red)		Sludge return	25mm Ø (white)
	Transfert	25mm Ø (rouge)		Recirculation des boues	25mm Ø (blanc)
	Alimentación	25mm Ø (rojo)		Recirculación lodos	25mm Ø (blanco)
	Alimentazione	25mm Ø (rosso)		Ricircolo dei fanghi	25mm Ø (bianco)

D	oneAdvanced 150 EW Tankdom Maxi 2 x Carat XXL 32000 L / 2 x 8453 gal.		Artikel-Nr. product no. article no. articulo no. 106106
GB oneAdvanced 150 inh. TD-Maxi 2 x Carat XXL 32000 L / 8453 gal.	ES oneAdvanced 150 PE Cúpula Maxi 2 x Carat XXL 32000 L / 8453 gal.	FR oneAdvanced 150 EH Maxi-dôme 2 x Carat XXL 32000 L / 8453 gal.	revision
gezeichnet drawn ISC	Gewicht weight	Otto Graf GmbH Carl-Zeiss-Str. 2-6 DE-79331 Teningen mail@graf.info www.graf.info	
Datum date 2022.11.15	Toleranz tolerance +/- 3%		
Maßstab scale M 1:50	Einheiten units mm [inch] gal. = US gal.		

DIN A3